Signal Flow Sheet – Kaplan Penthouse

Lincoln Center

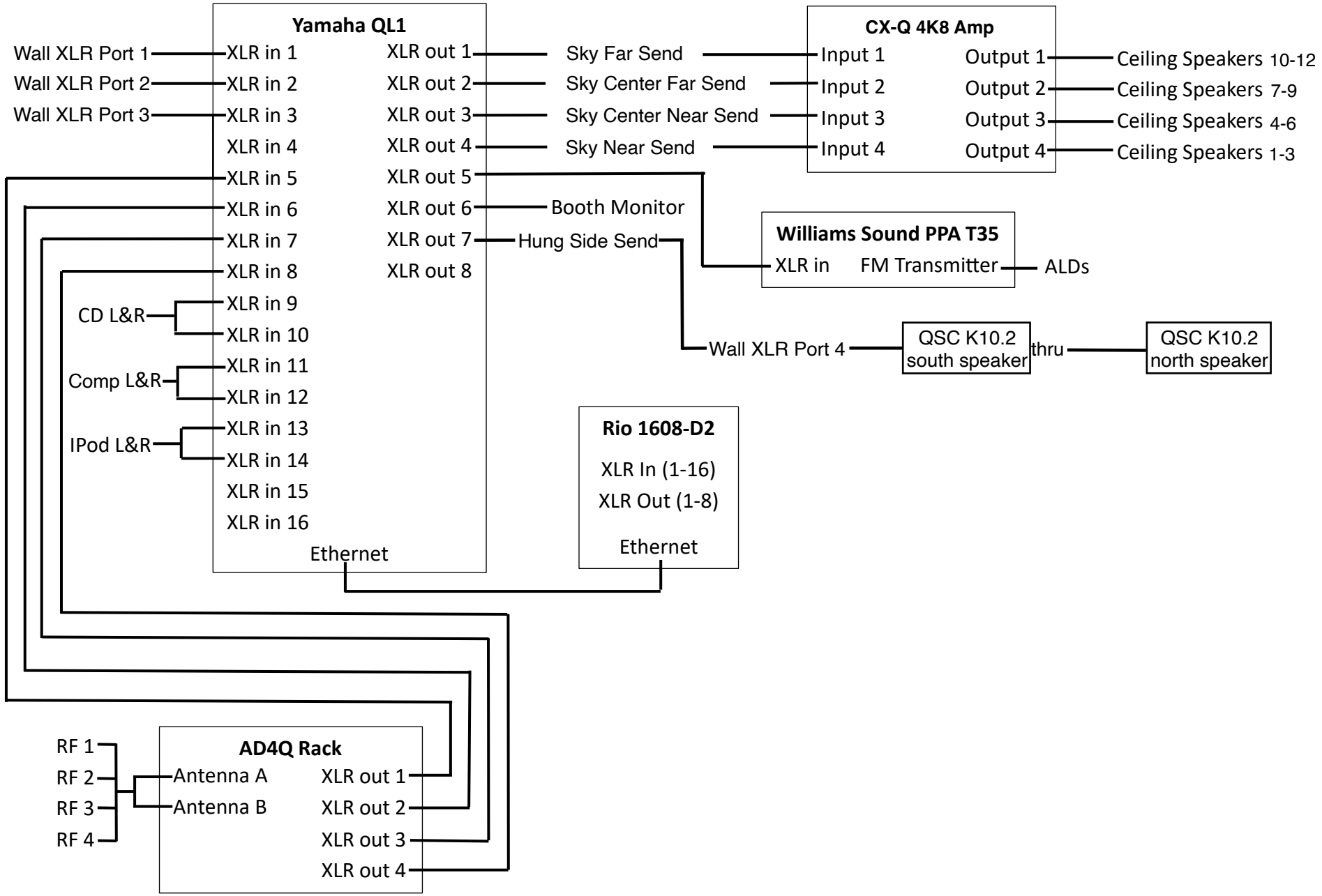

V1.2 As of 12/2/23 - Jesse Desrosiers